EE495 ECG Lab Project

Part 1: Instrumentation Amplifier

The instrumentation amplifier (Figure 1) was implemented using three OP484 op-amps powered by ±5 V.

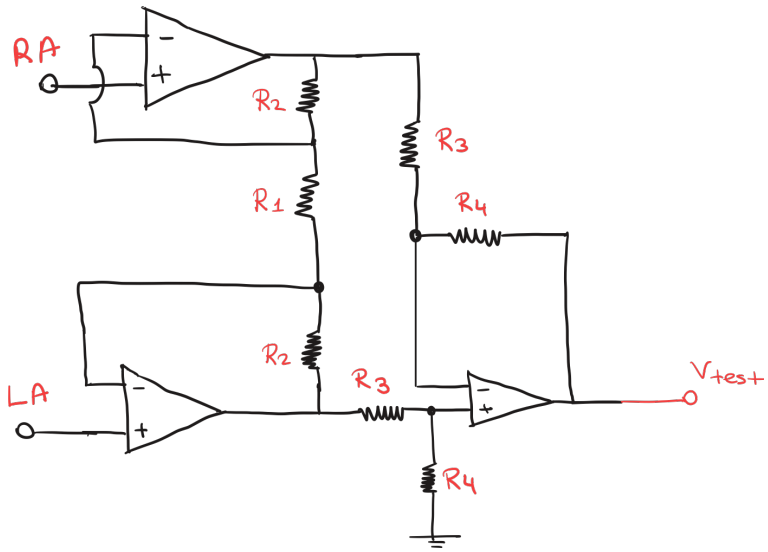

Figure 1: *Instrumentation amplifier schematic*

First stage (differential) gain

$$G_1 = \frac{2R_2 + R_1}{R_1}$$

with $R_2 = 20\ \text{k}\Omega$, $R_1 = 10\ \text{k}\Omega$:

$$G_1 = \frac{2(20\text{k}) + 10\text{k}}{10\text{k}} = \frac{50\text{k}}{10\text{k}} = 5$$

Second stage (difference amplifier) gain

$$G_2 = \frac{R_4}{R_3}$$

with $R_4 = 100\ \text{k}\Omega$, $R_3 = 20\ \text{k}\Omega$:

$$G_2 = \frac{100\text{k}}{20\text{k}} = 5$$

Total instrumentation amplifier gain

$$G_{\text{INA}} = G_1 G_2 = 5 \times 5 = 25$$

Bench verification: The amplifier was driven using a 10 mV differential sine wave generated by the Analog Discovery through a resistor attenuator. The measured output amplitude at V_{test} was approximately 0.25 V, confirming a gain near 25 across the 1–1000 Hz test range.

ECG acquisition: A Lead-I ECG was acquired with RA and LA as the differential inputs and RL as the reference (right-leg ground). The resulting waveform (Plot 1) shows ECG morphology with noticeable high-frequency interference and baseline drift typical of unfiltered acquisition.

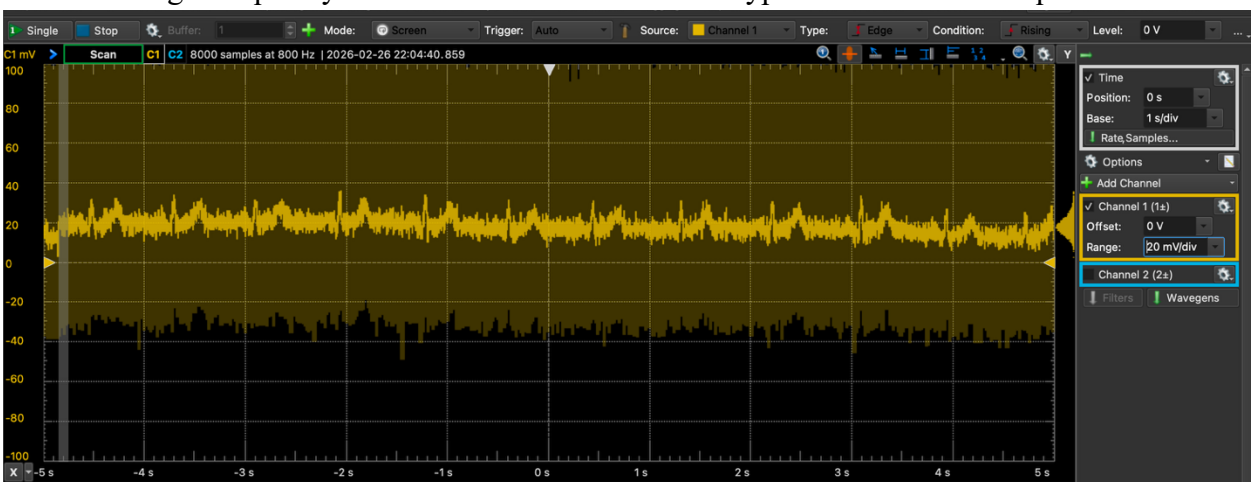

Plot 1: *Lead-I ECG after instrumentation amplifier (G ≈ 25)*

Part 2: Additional Amplification + Filtering

The fourth OP484 op-amp was used to add additional gain and implement approximate 1–100 Hz band-limiting (Figure 2).

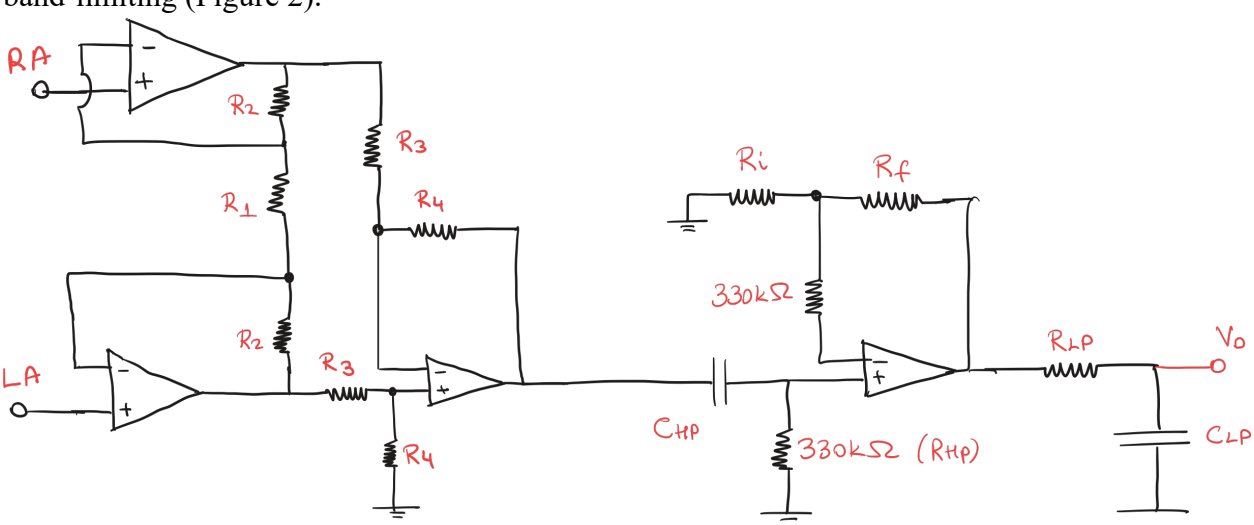

Figure 2: *Full ECG amplifier circuit (INA + filter/gain stage)*

High-pass filter

$$f_{HP} = \frac{1}{2\pi R_{HP} C_{HP}}$$

with $R_{HP} = 330\ \mathrm{k\Omega}$, $C_{HP} = 0.47\ \mu\mathrm{F}$:

$$f_{HP} = \frac{1}{2\pi(330\mathrm{k})(0.47\mu)} \approx 1.03\ \mathrm{Hz}$$

This attenuates electrode DC offset and low-frequency baseline drift.

Second-stage non-inverting gain

$$G_{\text{stage2}} = 1 + \frac{R_f}{R'}$$

with $R_f = 330\ \mathrm{k\Omega}$, $R' = 33\ \mathrm{k\Omega}$:

$$G_{\text{stage2}} = 1 + \frac{330\mathrm{k}}{33\mathrm{k}} = 11$$

Low-pass filter (noise reduction)

$$f_{LP} = \frac{1}{2\pi R_{LP} C_{LP}}$$

with $R_{LP} = 33\ \mathrm{k\Omega}$, $C_{LP} = 0.047\ \mu\mathrm{F}$:

$$f_{LP} = \frac{1}{2\pi(33\mathrm{k})(0.047\mu)} \approx 103\ \mathrm{Hz}$$

This significantly reduces high-frequency noise while preserving QRS morphology.

Overall gain

$$G_{\text{total}} = G_{\text{INA}} \cdot G_{\text{stage2}} = 25 \times 11 = 275$$

ECG acquisition

Lead-I ECG was recorded again using the complete amplifier. Compared to Part 1, the final output (Plot 2) shows substantially reduced high-frequency interference and improved readability of ECG features.

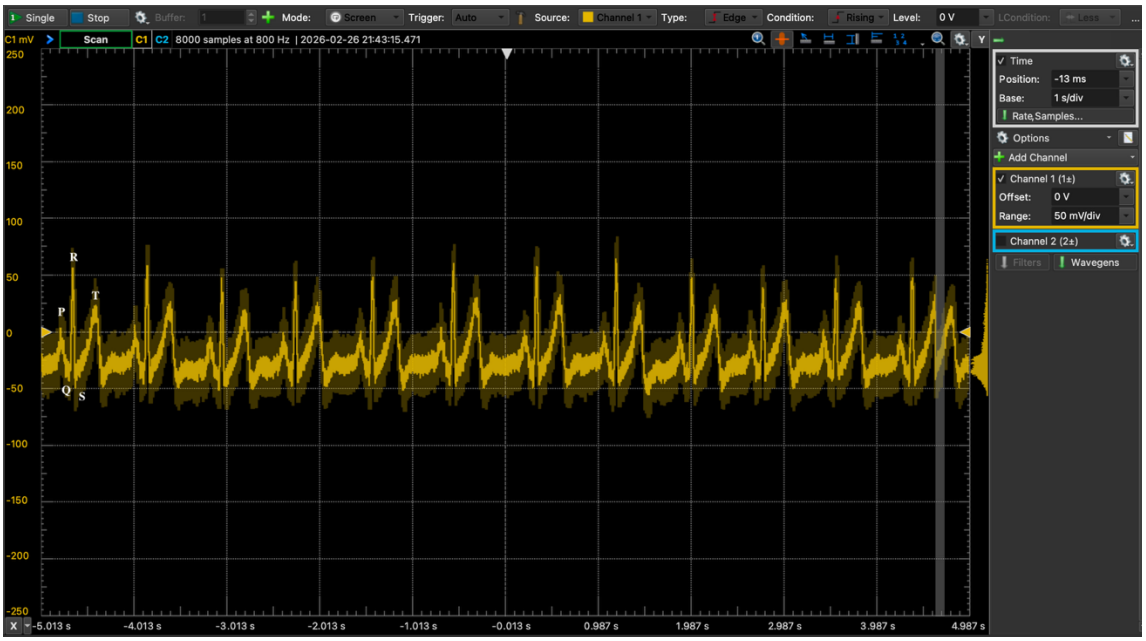

Plot 2: *Lead-I ECG after full amplifier (G ≈ 275, ~1–100 Hz)*

Digitization and Digital Post-Processing (1-minute recording)

A continuous 1-minute Lead-I ECG recording was stored using the Analog Discovery in 16-bit signed binary format at a 1024 Hz sampling rate for analysis in Python. For visualization, a digital 60 Hz notch filter was applied to further suppress power-line interference.

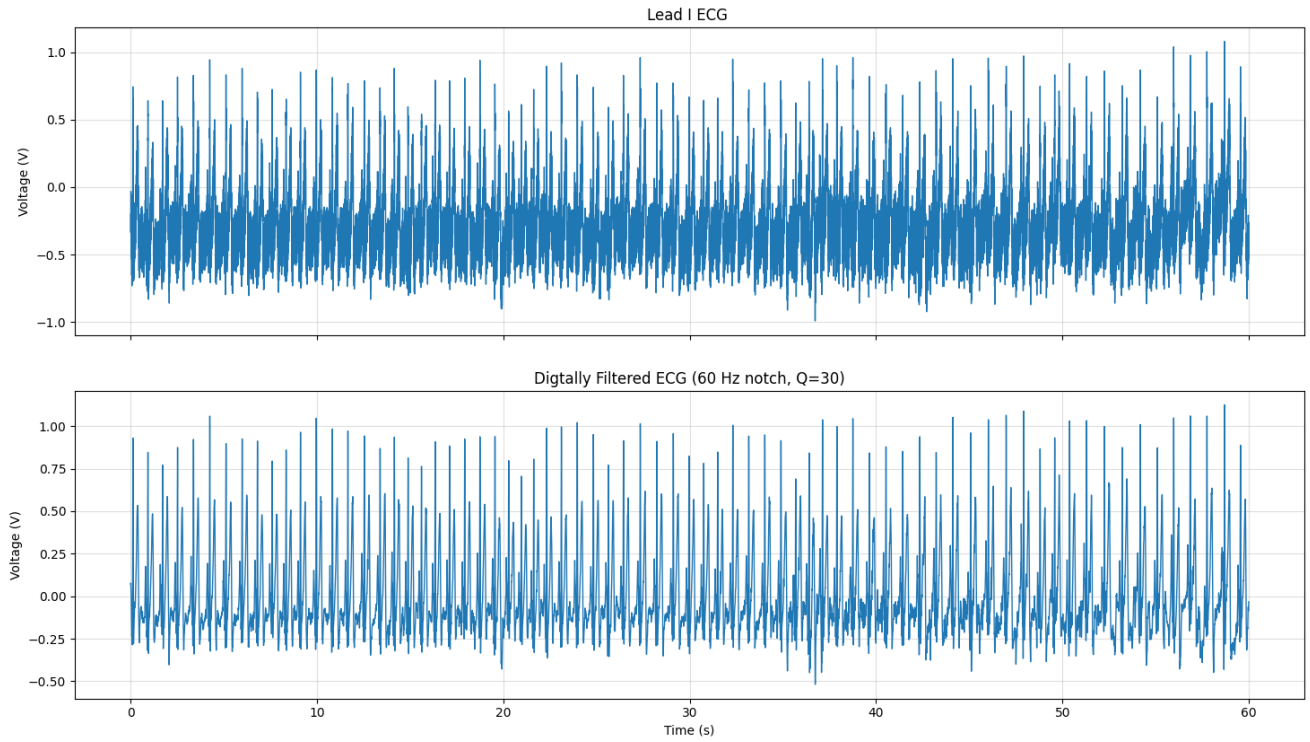

Fs = 1000 Hz | N = 60000 samples | Duration ≈ 60.0 s

Plot 3: *Digitized ECG (full 1-minute duration)*

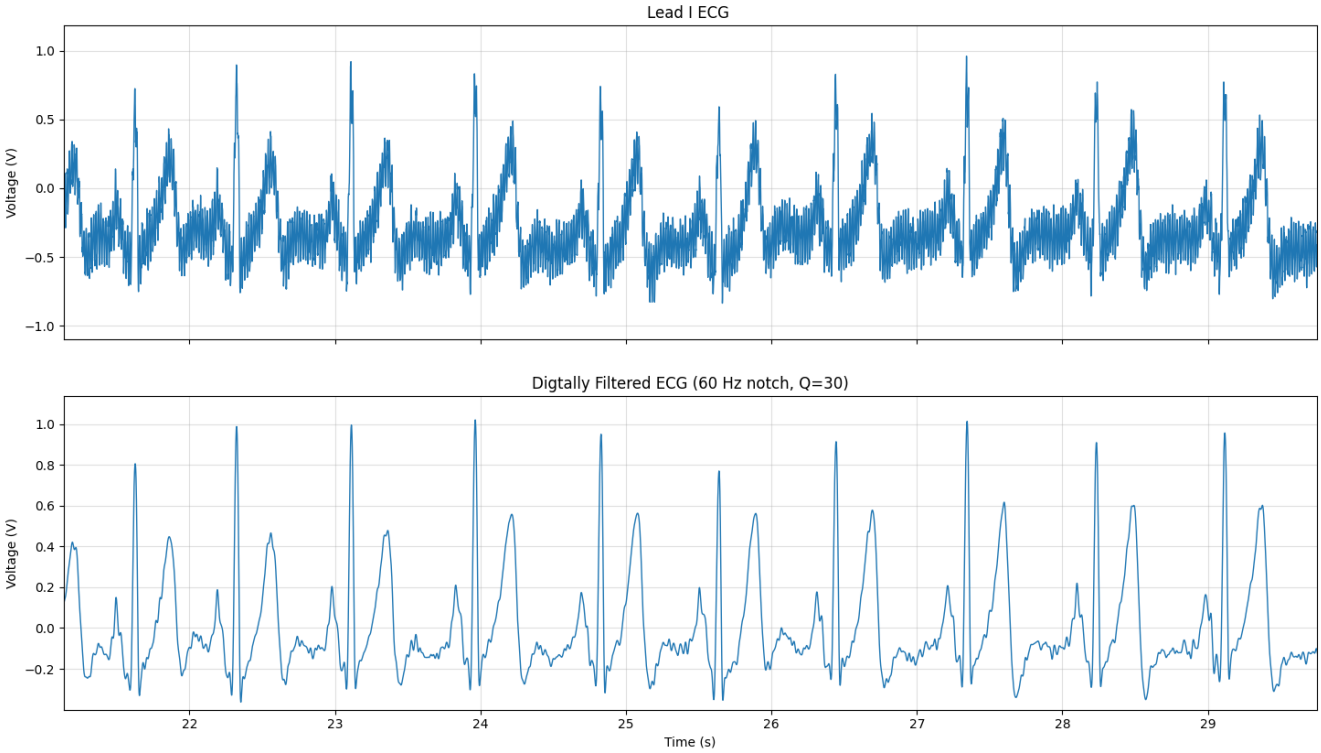

Plot 4: *Digitized ECG (zoomed view)*

In the zoomed view (Plot 4), removing 60 Hz interference improves visibility of lower-amplitude features; in particular, a small post–T-wave deflection that could indicate a U wave is more clearly resolved rather than being masked by high-frequency noise.

Appendix:

```
import numpy as np
import matplotlib.pyplot as plt
from scipy.signal import filtfilt, iirnotch

# User settings
fs = 1000.0
path = "/Users/erenerenel/Desktop/EE495/EE495 Code/default.csv"

NOTCH_HZ = 60.0
NOTCH_Q = 30.0

# Load CSV
data = np.genfromtxt(path, delimiter=",", comments="#", invalid_raise=False)
data = np.atleast_2d(data)
data = data[~np.all(np.isnan(data), axis=1)]

print("Loaded shape:", data.shape)
if data.shape[0] < 1000:
    raise ValueError("CSV loaded too few rows")

col0 = data[:, 0]
is_time_like = np.all(np.diff(col0[:200]) > 0) and (np.nanmedian(np.diff(col0[:200]))
< 0.05)

if data.shape[1] >= 2 and is_time_like:
    t = col0
    c1_volts = data[:, 1]
else:
    c1_volts = data[:, 0]
    t = np.arange(c1_volts.size) / fs

mask = ~np.isnan(c1_volts)
c1_volts = c1_volts[mask]
t = t[mask]

print("Samples:", c1_volts.size, "Duration(s):", (t[-1] - t[0]) if t.size else 0)

# Filtering
bN, aN = iirnotch(NOTCH_HZ, Q=NOTCH_Q, fs=fs)
ecg_filt = filtfilt(bN, aN, c1_volts)

# Plot
```

```
raw_mv = c1_volts / 1000
filt_mv = ecg_filt / 1000

fig, ax = plt.subplots(2, 1, sharex=True, figsize=(10, 6))

ax[0].plot(t, raw_mv, linewidth=1.0)
ax[0].set_title("Lead I ECG ")
ax[0].set_ylabel("Voltage (V)")
ax[0].grid(True, alpha=0.4)

ax[1].plot(t, filt_mv, linewidth=1.0)
ax[1].set_title(
    f"Digtally Filtered ECG ({NOTCH_HZ:g} Hz notch, Q={NOTCH_Q:g})"
)
ax[1].set_xlabel("Time (s)")
ax[1].set_ylabel("Voltage (V)")
ax[1].grid(True, alpha=0.4)

duration_s = t[-1] - t[0]
fig.text(
    0.01, 0.01,
    f"Fs = {fs:g} Hz | N = {len(t)} samples | Duration ≈ {duration_s:.1f} s",
    fontsize=12
)

fig.tight_layout(rect=[0, 0.02, 1, 1])
plt.show()
```